C Prox Ltd (inc Quantek)
59 Sheffield Road, Dronfield, S18 2GF
+44(0)1246 417113 sales@cproxltd.com www.quantek.co.uk

Keypad & Reader Access Control

DPN-2

User Manual

Contents

1. Packing List 2
2. Description 2
3. Features 2
4. Specification 3
5. Installation 3
6. Wiring 3
7. Sound and light indication 4
8. Quick programming guide 4
   8.1 Administrator settings (master code, manager cards, anti-duress, etc) 4
   8.2 User setting for Zone 1 (add/delete users, door opening mode, relay time, etc) 4
   8.3 User setting for Zone 2 (add/delete users, door opening mode, relay time, etc) 5
   8.4 System settings (working mode, facility code, Wiegand format, transmission code, etc) 5
   8.5 User optional settings (keypad tone, backlight mode, LED mode, etc) 5
9. Full programming guide 6
   Programming advice 6
   9.1 Administrator settings (master code, manager cards, anti-duress, etc) 6
   9.2 User Settings for Zone 1 (add/delete users, door opening mode, relay time, etc) 7
   9.3 User Settings for Zone 2 (add/delete users, door opening mode, relay time, etc) 8
   9.4 System settings (working mode, facility code, Wiegand format, transmission code, etc) 8
   9.5 User optional settings (keypad tone, backlight mode, LED mode, etc) 9
10. User operation 10
11. Alarm functions 10
12. Multi working modes (information and setup) 10
   12.1 Wiegand reader mode 10
   12.2 Standalone for single door 11
   12.3 Standalone for two doors 11
   12.4 With external reader for two doors 11
   12.5 Two units interlocked for two doors 11
   12.6 Anti-passback for single door 12
   12.7 Anti-passback for two doors 12
13. Wiring diagrams for all 7 multi working modes 12
14. Troubleshooting 15
15. Reset to factory default 15
16. Issue record 15

1. Packing List

Name	Quantity	Remarks
Keypad	1	DPN-2
User manual	1	
Screw driver	1	Φ20mm×60mm, special for keypad
Rubber plug	2	Φ6mm×30 mm, used for fixing
Self tapping screws	2	Φ4mm×27 mm, used for fixing
Diode	1	IN4007

Please ensure that all the above contents are correct. If any are missing please notify us immediately.

2. Description

DPN-2 is an access control keypad and proximity reader for up to two doors. It supports card, pin, card+pin access.

It has 2 relays to control 2 doors and supports up to 2000 users in total, each user can possess one card and one pin. It can directly drive a lock, alarm, doorbell, and can also connect with an exit button and door contact.

There are 7 working mode with this device:

1. Wiegand reader.
2. Standalone for single door.
3. Standalone for two doors.
4. With external reader for two doors.
5. Two units interlocked for two doors.
6. Anti-passback for single door.
7. Anti-passback for two doors.

In addition, it also supports 1 master code, 2 manager cards, 2 anti-duress card users, and 2 anti-duress PIN users, providing users with easy operations and good reliability.

3. Features

- Strong zinc alloy casing.
- Waterproof, conforms to IP68.
- Digital backlit keys. The back light can be set to normally on, normally off, or human approach on.
- Anti-tamper alarm, door contact alarm and anti-duress alarm functions.
- Add and delete users quickly with manager cards.
- Can add and delete users via the keypad.
- Multiple working modes to suit most applications.
- Up to 2000 users.
- Adjustable door output, alarm and door open times.
- Standalone or Wiegand.
- Red, yellow & green LEDs display working status.
- Easy to install and program.

4. Specification

Operating voltage	12-24Vac/dc
User capacity	2000
Card reading distance	3-6 cm
Card frequency	125KHz EM
Active current	<60 mA
Idle current	<25 mA
Lock output load	<1A
Alarm output load	<1A
Operating temperature	-45 to 55°C
Operating humidity	0% to 95%
Waterproof	Conforms to IP68

5. Installation

- Remove the back cover from the keypad using the supplied special screw driver.
- Use the back cover or the template to mark and drill 2 fixing holes and 1 cable hole.
- Put the supplied rubber wall plugs into the 2 fixing holes.
- Fix the back cover firmly on the wall with the 2 self-tapping screws.
- Thread the cable through the cable hole.
- Attach the keypad to the back cover.

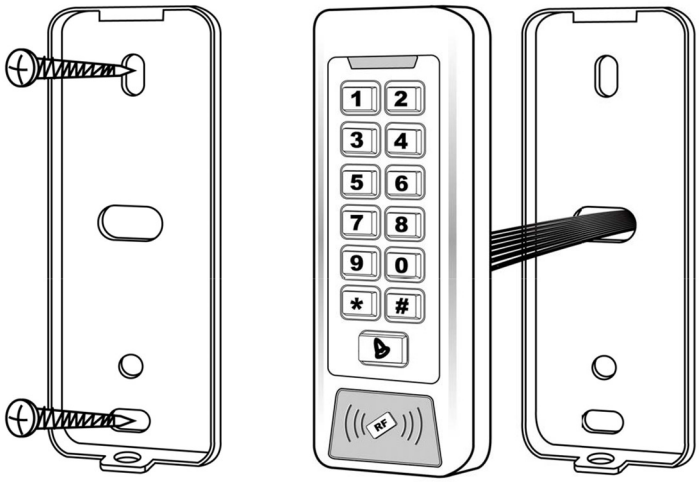

6. Wiring

	ZONE 2 (Upper socket)			ZONE 1 (Lower Socket)		
No.	**Marks**	**Colour**	**Description**	**Marks**	**Colour**	**Description**
1	BELL_A	Pink	Doorbell button	D0	Green	Wiegand output D0
2	BELL_B	Pink	Doorbell button	D1	White	Wiegand output D1
3	ALARM+	Red	Alarm anode	AC1	Red	AC1 (+12/24V)
4	AC2	Black	AC input	GND	Black	GND
5	OPEN2	Yellow	Exit button	OPEN1(LED)	Yellow	Exit button
6	D_IN2	Brown	Door contact	D_IN1(BZ)	Brown	Door contact
7	ALARM2-	Grey	Alarm 2	ALARM1-	Grey	Alarm 1
8	NO2	Blue	Relay 2 NO	NO1	Blue	Relay 1 NO
9	COM2	Purple	Relay 2 COM	COM1	Purple	Relay 1 COM
10	NC2	Orange	Relay 2 NC	NC1	Orange	Relay 1 NC

7. Sound and light indication

Operation	LED Color	Buzzer
Standby	Red flash	
Press key		Di
Read card	Green	Di-
Door 1 open	Green	Di-
Door 2 open	Green flash	Di-
Operation successful	Green	Di-
Operation failed		DiDiDi
PIN inputting	Red	
Card & PIN reading	Red	
Multi Card reading	Red	
Under menu	Red	
Under setting	Orange	
Manager card enter	Orange	DiDi
Manager card exit	Red flash	Di-
Alarm	Red quick flash	Alarm

8. Quick programming guide

8.1 Administrator settings

Standby	Master code	Menu	Setting	Remarks	Functions
Red flash	Red	Red	Orange		
*	Master code#	00	New master code# Repeat new master code# (Note: Code length 6-8 digits)	Factory default: 999999	Change the master code
		01	Read manager add card	Default: Zone 1	Set manager add card
		02	Read manager delete card		Set manager delete card
		03	Read anti-duress card (Zone 1)		Set Zone 1 anti-duress card
		04	Read anti-duress card (Zone 2)		Set Zone 2 anti-duress card
		05	Anti-duress PIN# (Zone 1)		Set Zone 1 anti-duress PIN
		06	Anti-duress PIN# (Zone 2)		Set Zone 1 anti-duress PIN
		07	0000#	Both zones	Delete all users
		51			Master open Lock 1
		52			Master open Lock 2

8.2 User setting for Zone 1

Standby	Master code	Menu	Setting	Remarks	Functions
Red flash	Red	Red	Orange		
*	Master code#	11	Read card	Users can be added continuously without exiting programming mode	To add card users
			User ID number# Read card		
			Card number#		
			User ID number# Card number#		
			User ID number# PIN#		To add PIN users
		12	Read card	Users can be deleted continuously without exiting programming	To delete users
			User ID number#		
			Card number#		
		13	0#	Default: 2	Entry by card
			1#		Entry by card + PIN
			2#		Entry by card or PIN
		14	0-99#	Default: 5	Set door relay time
		15	0#	Default: 0	Relay setting pulse mode
			1#		Relay setting toggle mode
		16	1-10#	Default: 1 Card mode only	To set door open by multi cards
		17	User ID number# Card number# Card quantity#		To add a series of consecutive cards

See section 10.5 for assigning a PIN to a registered card user. Default 'old' PIN is 1234.

8.3 User setting for Zone 2 (The unit must be in two door mode to change these settings)

Standby	Master code	Menu	Setting	Remarks	Functions
Red flash	Red	Red	Orange		
*	Master code#	21	Read card	Users can be added continuously without exiting programming mode	To add card users
			User ID number# Read card		
			Card number#		
			User ID number# Card number#		
			User ID number# PIN#		To add PIN users
		22	Read card	Users can be deleted continuously without exiting programming	To delete users
			User ID number#		
			Card number#		
		23	0#	Default: 2	Entry by card
			1#		Entry by card + PIN
			2#		Entry by card or PIN
		24	0-99#	Default: 5	Set door relay time
		25	0#	Default: 0	Relay setting pulse mode
			1#		Relay setting toggle mode
		26	1-10#	Default: 1 Card mode only	To set door open by multi cards
		27	User ID number# Card number# Card quantity#		To add a series of consecutive cards

See section 10.5 for assigning a PIN to a registered card user. Default 'old' PIN is 1234.

8.4 System settings

Standby	Master code	Menu	Setting	Remarks	Functions
Red flash	Red	Red	Orange		
*	Master code#	30	0-15#	Default: 0	To set facility code
		31	0#	Factory default: 1. When device reset to factory default, the setting is still valid	Wiegand reader
			1#		Standalone for single door
			2#		Standalone for two doors
			3#		With external reader for two doors
			4#		Two units interlocked for two doors
			5#		Anti-passback for single door
			6#		Anti-passback for two door
		32	26-37#	Default: 26	To set Wiegand format
		33	0-2#	When device reset to factory default, the setting is still valid	To set keypad transmission format
		34	1-3#	Default: 1	To set alarm time
		35	0#	Safe mode. Default: 0	Normal mode
			1#		Dead mode
			2#		Alarm mode

8.5 User optional settings

Standby	Master code	Menu	Setting	Remarks	Functions
Red flash	Red	Red	Orange		
*	Master code#	41	0#	Default: 1	Buzzer will be silence except when in programming mode
			1#		Buzzer will sound when keys are pressed
		42	0#	Default: 2	Disable keypad backlight
			1#		Enable keypad backlight
			2#		Automatic mode. Normally it is off (sleeping mode), but wakes up with human approach
		43	0#	Default: 1	LED light disabled in standby status
			1#		LED flash when in standby status

9. Full programming guide

Programming advice

- Master code must be 6-8 digits. Anti-duress PIN must be 8 digits. User PIN must be 4-6 digits. The first digit of user PIN and anti-duress PIN in Zone 1 must be 1; in Zone 2 it must be 2.
- User ID number is any number between 1 & 2000. Invalid 0's can be omitted.
- Card numbers must be 8 or 10 digits, if the card number is less than 8 or 10 digits, input 0 before the card number.
- Door open time is 0-99 seconds. 0=50mS.
- When registering one card user onto the device, the device will automatically generate a PIN 1234, this PIN can't open the door, it is used to assign a PIN to the user if needed.
- When an invalid master PIN is entered, the device will go back to standby after 5 seconds.
- In operating the keypad, pressing # means to confirm the input of the PIN. In operation of a cycle adding or deleting cards, pressing # means to end the cycle and backup the operation. Pressing * means to exit the operation.
- Working mode and keypad transmission format have been set before shipping. The customer can change these settings according to their requirements, but when the device is reset to factory default the setting is still valid.
- When users of Zone 1 are successfully registered, the LED will turn green; when users of Zone 2 are successfully registered, the LED will flash green.

9.1 Administrator settings

9.1.1 Enter into programming mode

***** **Master code** **#** Default master code is 999999

All the steps below must be done after entering into programming mode.

9.1.2 Change the master code

00 **New master code** **#** **New master code** **#**

Master code must be 6-8 digits.

9.1.3 Set manager cards

Set manager add card

01 **Read manager add card**

Set manager delete card

02 **Read manager delete card**

Note: When adding new manager cards, the new one will automatically overwrite the old card. Default Zone 1.

9.1.4 Set anti-duress cards

Set anti-duress card for Zone 1

03 **Read anti-duress card**

Set anti-duress card for Zone 2

04 **Read anti-duress add card**

Note: When adding new anti-duress cards, the new one will automatically overwrite the old card.

9.1.5 Set anti-duress PIN

Set anti-duress PIN for Zone 1

05 **8-digit duress PIN** **#**

Set anti-duress PIN for Zone 2

06 **8-digit duress PIN** **#**

Note: The first digit must be 1 for Zone 1; the first digit must be 2 for Zone 2.

When adding a new anti-duress PIN, the new one will automatically overwrite the old PIN.

9.1.6 Delete all users

07 **0000** **#**

Note: Both Zone 1 and Zone 2 users will be deleted.

9.1.7 Administrator open locks

Administrator open lock 1

51

Administrator open lock 2

52

9.2 User Settings for Zone 1

9.2.1 Read card to add user

11 **Read card** **…** **Read card** **#**

Note: Multiple card users can be added continuously without exiting programming mode. The user ID number will be automatically generated for this method.

9.2.2 Use ID number and read card to add user

11 **ID number** **#** **Read card** **…** **ID number** **#** **Read card** **#**

9.2.3 Use card number to add user

11 **Card number** **#** **…** **Card number** **#**

Note: Card number must be 8 or 10 digits, if it is less then input a 0 before. The user ID will be automatically generated for this method.

9.2.4 Use ID number and card number to add user

11 **ID number** **#** **Card number** **#** **…** **ID number** **#** **Card number** **#**

Adding a card user will automatically generate one '1234' PIN. This PIN can't open the door, it's only for the user to modify the PIN. See section 10.5 (page 10) for more information.

9.2.5 User manager card to add card user

Read manager add card **Read user card** **…** **Read manager add card**

9.2.6 Use ID number and PIN to add user

11 **ID number** **#** **PIN** **#** **…** **ID number** **#** **PIN** **#**

Note: The PIN is any 4-6 digits. The 1st digits must be 1 for Zone 1, with the exception of 1234 which is reserved.

9.2.7 Read card to delete user

12 **Read card** **…** **Read card** **#**

9.2.8 Use ID number to delete user

12 **ID number** **#** **…** **ID number** **#**

9.2.9 Use card number to delete user

12 **Card number** **#** **…** **Card number** **#**

9.2.10 User manager card to delete card user

Read manager delete card **Read user card** **…** **Read manager delete card**

9.2.11 Delete all users

07 **0000** **#**

Note: Both Zone 1 and Zone 2 will be deleted.

9.2.12 Set door opening mode

Entry is by card only

13 **0** **#**

Entry is by card and PIN together

13 **1** **#**

Entry is by card or PIN (factory default)

13 2 #

9.2.13 Set door relay time

14 0-99 #

Note: Door relay time is 0-99 seconds, factory default is 5.

9.2.14 Set door relay mode

Pulse mode

15 0 #

The relay will operate for the pre-set pulse time every time it receives a valid card/PIN

Toggle mode

15 1 #

The relay changes state every time it receives a valid card/PIN and will not change back until it receives another.

9.2.15 Set door opening by multiple cards

16 1-10 #

Note: The door will only open after reading all valid multi cards up to the card quantity setting (1-10). It is only for card entry mode and the default is 1.

9.2.16 Add a series of consecutive card users

17 ID number # Card number # Card quantity #

Note: The card numbers must be consecutive. Card quantity is 1-2000, card number 8 or 10 digits.

9.3 User Settings for Zone 2

The method is the same as Zone 1, except the corresponding menu should be 21, 22, 23, 24, 25, 26 & 27. The unit must be set in 2 door mode to edit Zone 2 user settings.

9.4 System settings

9.4.1 To set facility code

30 0-15 #

Note: Code should be 0-15, factory default is 0.

9.4.2 Setting working mode (see section 12 on page 10 for more details on each mode)

To set as Wiegand reader

31 0 #

To set as standalone for single door (factory default)

31 1 #

To set as standalone for two doors

31 2 #

To set as with external reader for two doors

31 3 #

To set as two units interlocked for two doors

31 4 #

To set as anti-passback for single door

31 5 #

To set as anti-passback for two door

31 6 #

9.4.3 To set Wiegand format

32 26-37 #

Note: Factory default is 26

9.4.4 To set keypad transmission format

33 0-2 #

Note: Keypad transmission format is 0, 1 or 2, factory default is 0. When the device is factory reset, the setting remains valid. See section 12.1 (pages 10 & 11) for more details.

9.4.5 Setting the alarm time

34 1-3 #

Note: Factory default is 1 minute. When the device is factory reset, the setting remains valid.

9.4.6 Setting the safe mode

Normal mode (factory default)

35 0 #

Dead mode

35 1 #

If an invalid card or PIN in inputted 10 times in 10 minutes, the system will be dead for 10 minutes.

Alarm mode

35 2 #

If an invalid card or PIN in inputted 10 times in 10 minutes, external alarm and built-in buzzer are activated.

9.5 User optional settings

9.5.1 Setting keypad tone off or on

Off mode

41 0 #

The device will be silent except when in programming mode.

On mode (factory default)

41 1 #

The device will emit a tone every time a key is pressed.

9.5.2 Setting keypad back light

Off mode

42 0 #

On mode

42 1 #

Automatic mode (factory default)

42 2 #

Normally the back light is off (sleeping mode) but wakes up with human approach.

9.5.3 Setting LED light (standby status)

Disable LED light

43 0 #

Flashing LED light (factory default)

43 1 #

10. User operation

10.1 Entry by card (when multi card quantity is set to 1, factory default)

Read user card, door will be unlocked

10.2 Entry by card (when multi card quantity is set to 2-10)

Read user cards one by one within 5 seconds of each other, up to the required quantity, door will be unlocked.

10.3 Entry by card and PIN

Present card, then enter PIN (4-6 digits) followed by #. The door will unlock.

10.4 Entry by card or PIN mode

Present card or enter PIN (4-6 digits) followed by #. The door will unlock.

10.5 Modify user PIN (no need to enter programming)

***** **Read card** **Old PIN** **#** **New PIN** **#** **New PIN** **#** (The 'old' PIN for newly generated card users is 1234)

Or ***** **User ID number** **#** **Old PIN** **#** **New PIN** **#** **New PIN** **#** (If already modified from 1234)

11. Alarm functions

11.1 Anti-tamper alarm

If the device is disassembled illegally, the external alarm and built-in buzzer will operate.

11.2 Door contact alarm

When wired to a door contact, if the door is opened illegally, the external alarm and built in buzzer will operate.

11.3 Anti-duress alarm

When an anti-duress card/PIN is detected, the corresponding lock will still open but the external alarm will operate. The built-in buzzer will not operate.

11.4 Removing the alarm

Read a valid user card, manager card or input the master code to switch the alarm off. The alarm will also automatically switch off after 1 minute.

12. Multi working modes

12.1 Wiegand reader mode

In this mode, the DPN-2 works as a reader, connected with a common access controller. It has the following functions:

- Modify master code
- Set facility code
- Set the card transmission format
- Set the keypad transmission format
- Set optional settings
- Anti-tamper alarm

When LED level is low, the indicator light (LED) will turn green. After 30 seconds or LED level rising, LED will be back to normal. When BZ level is low, the buzzer will beep. After 30 seconds or BZ level rising, the buzzer will be back to normal.

When used as a reader, both the card number and keypad transmits in Wiegand format. The output data is shown by the low level of D0 & D1 wires:
D0: Low level means 0, green wire
D1: Low level means 1, white wire
The pulse width of low level is 100uS, bit period is 1.6mS.

The digits of the card number can be set to 26-37 bit, and should be matched with the controller. (Factory default is 26Bit)
Keypad transmission can be set in the following 3 modes:

Mode 0: Virtual card number

The unit will transmit the PIN data when it receives the last key (#) press after the PIN code.
Format: Decimal card number with 10 digits; facility code (1st - 4th digit) + PIN code (5th – 10th digit).

Example - Facility code: 15, PIN code: 9999
Press 9999#, the output format will be 0015009999

PIN code: 999999
Press 999999#, the output format will be 0015999999

Mode 1: 4 Bit

The output data is transmitted in the following format after every key is pressed:

key	Output in hex	Output in Binary
0	0	0000
1	1	0001
2	2	0010
3	3	0011
4	4	0100
5	5	0101
6	6	0110
7	7	0111
8	8	1000
9	9	1001
*	A	1010
#	B	1011

Mode 2: 8 Bit

The output data is transmitted in the following format after every key is pressed:

key	Output in hex	Output in Binary
0	0	11110000
1	1	11100001
2	2	11010010
3	3	11000011
4	4	10110100
5	5	10100101
6	6	10010110
7	7	10000111
8	8	01111000
9	9	01101001
*	A	01011010
#	B	01001011

12.2 Standalone for single door

In this mode, the device supports connecting and external card for exiting the door.
The users of Zone 1 or external reader can open the door by valid card or PIN.

12.3 Standalone for two doors

In this mode, users can control two doors independently. Read a valid card or input a valid PIN for Zone 1 and door 1 will open. Read a valid card or input a valid PIN for Zone 2 and door 2 will open.
Note: The common card for Zone 1 and Zone 2 can only open door 1.

12.4 With external reader for two doors

In this mode, this unit is for opening door 1, the external reader is for opening door 2.
Read valid card or input valid PIN for Zone 1 on this unit, door 1 will open; read valid card or input pin on Zone 2 of external reader, door 2 will open.

12.5 Two units interlocked for two doors

The interlock function is mainly used in banks, prisons and other places where a higher level of security is required. When door 2 is closed, read a valid card/input PIN on this device, door 1 will open; when door 1 is closed, read valid card/input PIN on external reader, door 2 will open.
Note: The valid card/PIN is only for Zone 1, users of Zone 2 are invalid.

12.6 Anti-passback for single door

In this mode, this unit is installed outside and is for entering the door. An external reader is installed inside for exiting the door.

The users can only enter when a valid card is read on the outside device, and exit when a valid card is read on the inside reader. Without first reading a card on the external device, the users cannot exit from the inside reader. Also, users can't enter twice without first exiting on the internal reader.

Note: This is only for card users of Zone 1, PIN users of Zone 1 and all users of Zone 2 are invalid.

12.7 Anti-passback for two doors

In this mode, this unit is installed on door 1 and is the anti-passback master unit. An external reader is installed on door 2, and is the anti-passback auxiliary unit. Then they build up a two door anti-passback system, often used in parking lot installations.

The users can only enter through door 1 when a valid card is read on this unit, and then exit through door 2 when a valid card is read on the external reader. Without entering a record on door 1, the users cannot exit through door 2. Also, the users can't enter twice without first exiting through door 2.

Note: This is only for card users of Zone 1, PIN users of Zone 1 and all users of Zone 2 are invalid.

13. Wiring diagrams for all 7 working modes

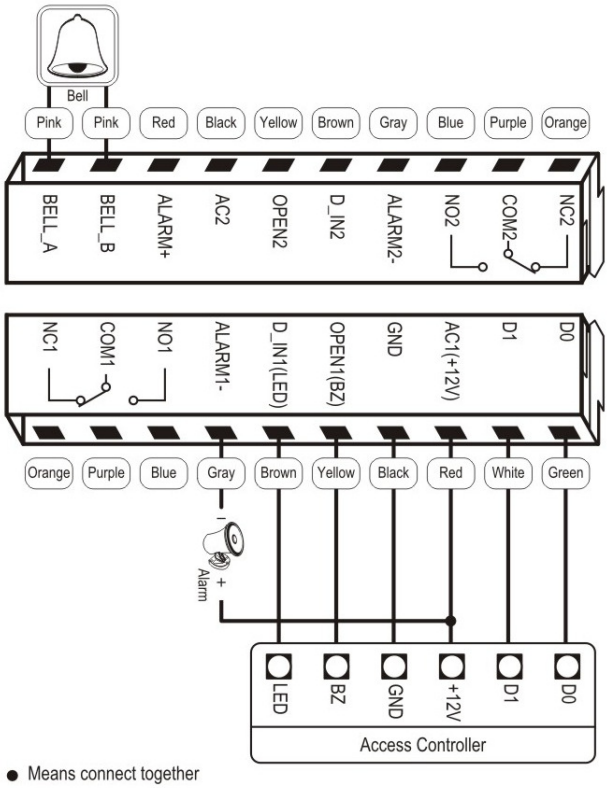

Mode Wiegand reader diagram

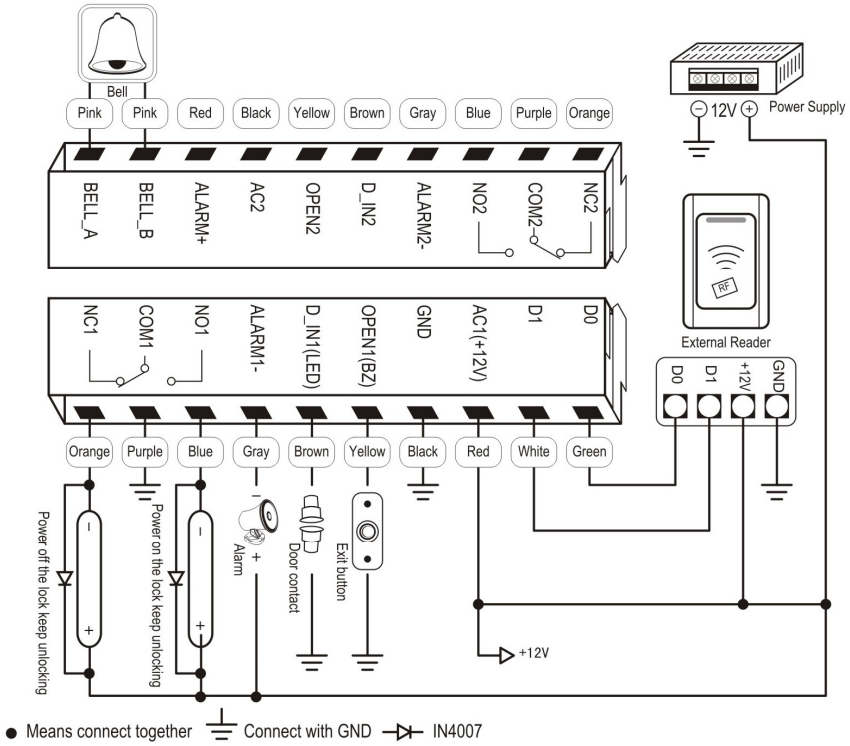

DC12V common power

Mode Standalone for single door diagram
Mode Anti passback for Single door diagram

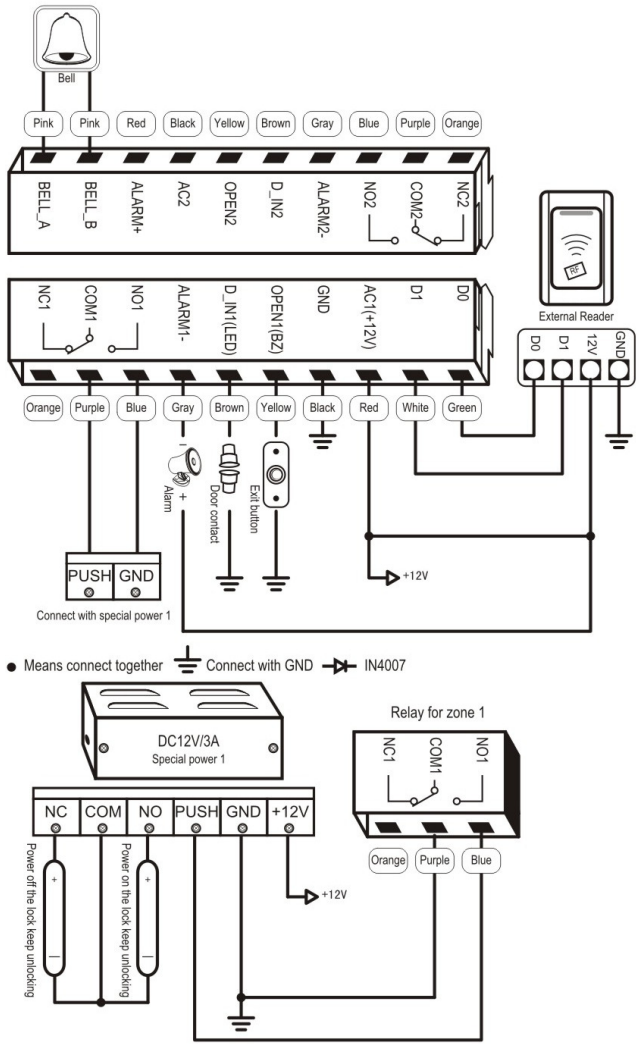

special power with Lock 1 diagram

DC12V special power

Mode Standalone for single door diagram
Mode Anti-passback for Single door diagram

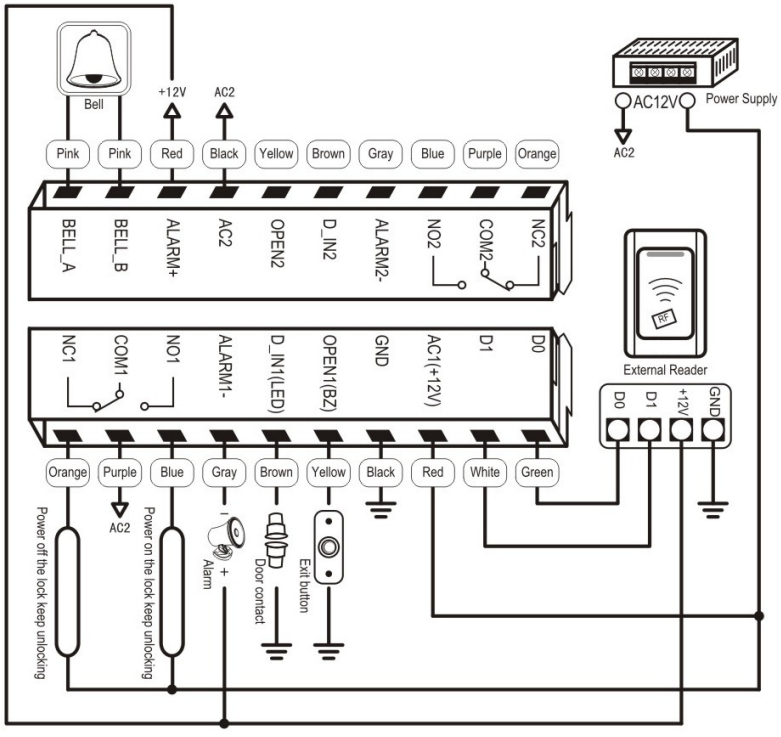

AC12V common power

Mode Standalone for single door diagram
Mode Anti-passback for Single door diagram

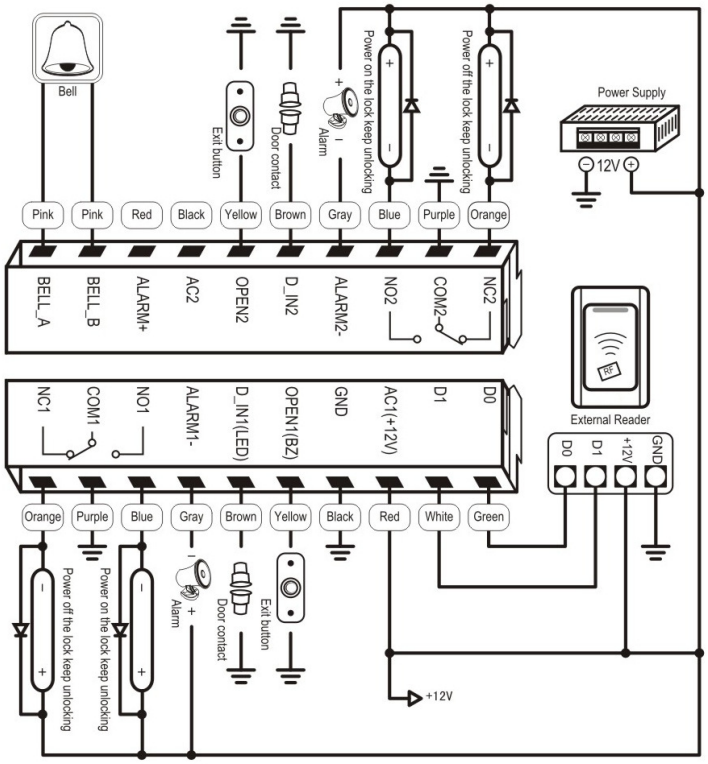

● Means connect together ⏚ Connect with GND ⊳| IN4007

DC12V common power

Mode With external reader for two doors diagram
Mdoe Standalone for two doors diagram
Mode Two units interlocked for two doors diagram
Mode Anti-passback for two doors diagram

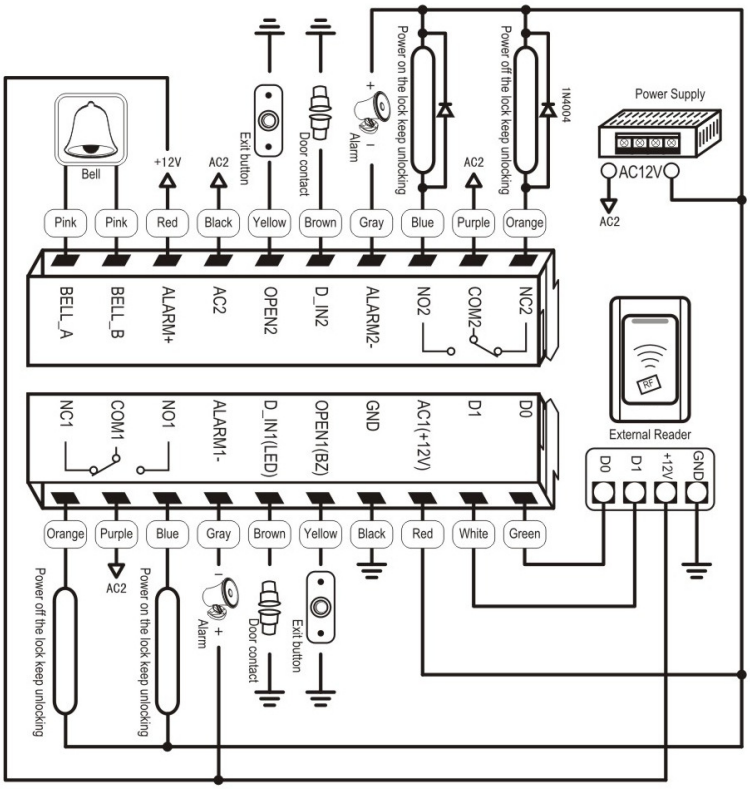

● Means connect together ⏚ Connect with GND ⊳| IN4007

AC12V common power

Mode With external reader for two doors diagram
Mdoe Standalone for two doors diagram
Mode Two units interlocked for two doors diagram
Mode Anti-passback for two doors diagram

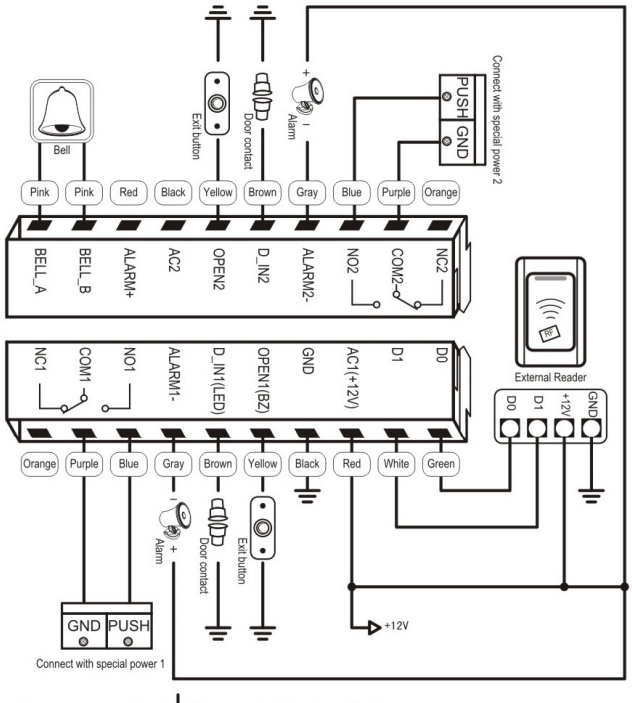

● Means connect together ⏚ Connect with GND ⊳| IN4007

Composite Diagram 1

DC12V special power 1

Mode With external reader for two doors diagram
Mdoe Standalone for two doors diagram
Mode Two units interlocked for two doors diagram
Mode Anti-passback for two doors diagram

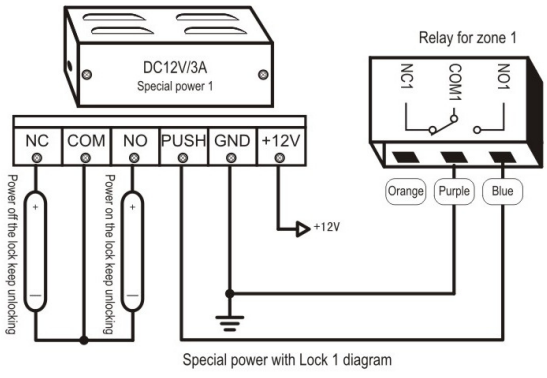

Special power with Lock 1 diagram

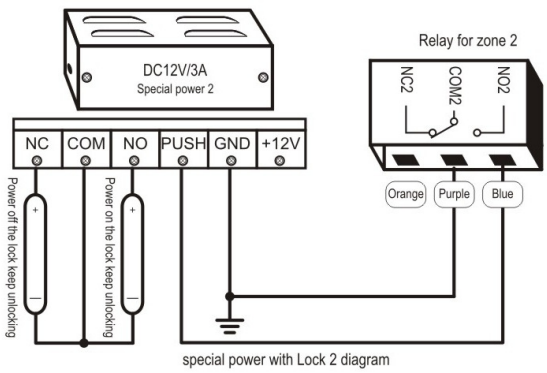

special power with Lock 2 diagram

Composite Diagram 2

DC12V special power 1

Mode With external reader for two doors diagram
Mdoe Standalone for two doors diagram
Mode Two units interlocked for two doors diagram
Mode Anti-passback for two doors diagram

14. Troubleshooting

Code	Fault	Fault cause	Solutions
1	Close read range	Quality of card	Use original cards
2	Problem in PIN setting	PIN is not standard	First number of the PIN should be 1 or 2 to match with the zone number. PIN shouldn't be 1234. PIN is 4 to 6 digits.
3	PIN doesn't open the door	Using PIN 1234	1234 is the original PIN & can't open the door. It should be modified to another PIN. Set door opening mode to card or PIN.
4	Alarms in normal conditions	When installed, light leaks under the bottom of the unit	Device should be installed flush to the wall.
5	No response after card reading	Unit is not in ready (standby) mode	Press * key, until the red LED starts flashing.
6	Keypad light is not bright	Mode of keypad light setting is wrong	Set keypad light as on or auto in user option settings.
7	Can't enter programming mode	Forget the master code	Reset to factory default, master code will be 999999. Only installer data is restored, user data is unaffected.

15. Reset to factory default

Disconnect power from the unit.

Press and hold # key whilst powering the unit back up.

On hearing two 'Di' sounds, release the # key, system is now back to factory default

16. Issue record

Site:		**Door 1 Location:**		
ID number	User name	PIN	Card number	Issue date

Site:		**Door 2 Location:**		
ID number	User name	PIN	Card number	Issue date

Please note it is always best to keep a digital copy of the issue record, especially on installations with over 10 users.